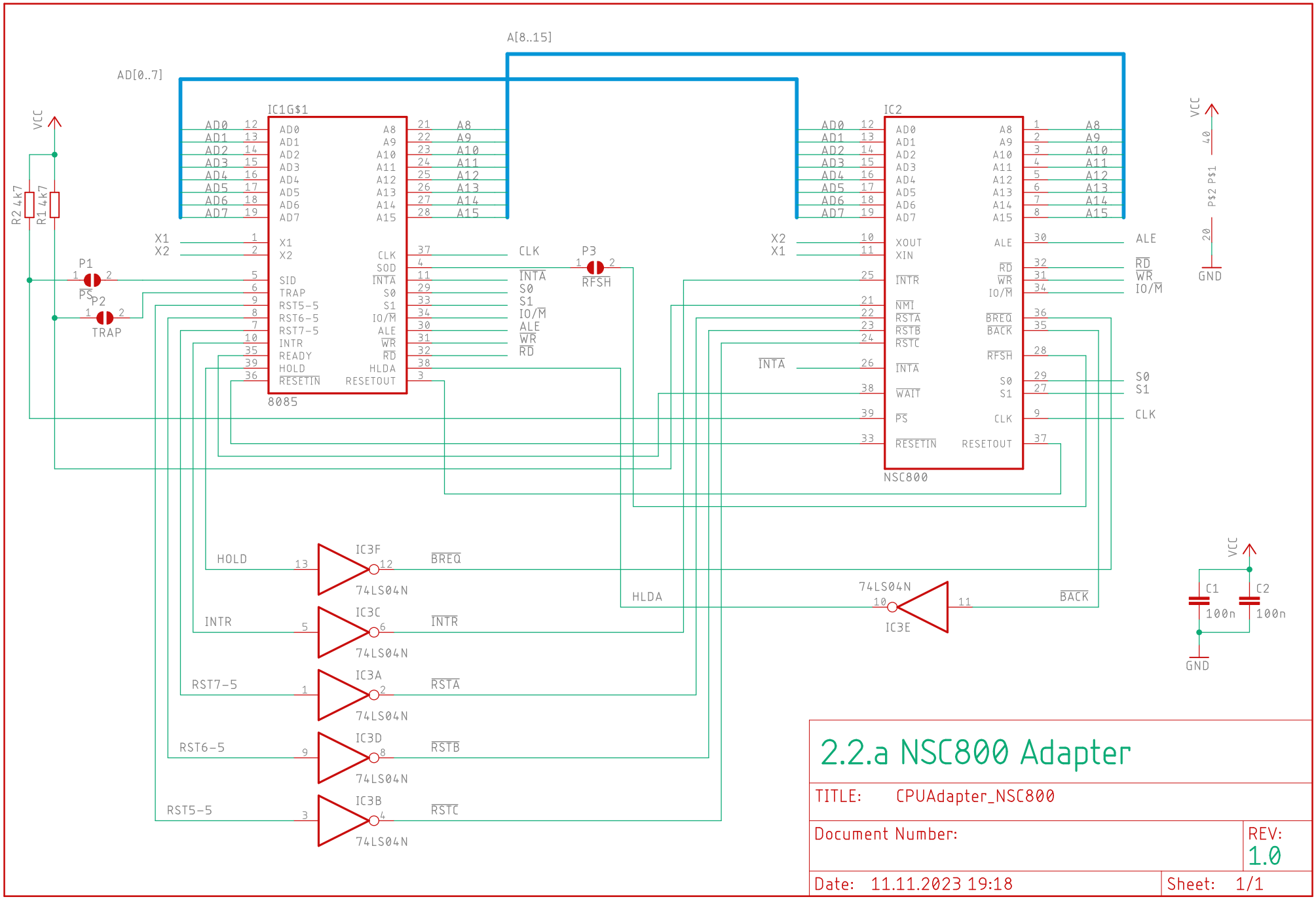

2.2.a NSC800 Adapter

TITLE: CPUAdapter_NSC800

Document Number:

REV: 1.0

Date: 11.11.2023 19:18

Sheet: 1/1